THERMALCARE
Superior equipment, Exceptional service

Accuchiller NQV Portable Chiller

5-ton Air-Cooled Chiller

Standard Features

Variable-Speed Compressor

Chillers usually operate with process heat loads less than 100% of available chiller capacity. With increasing emphasis on energy efficiency, we offer a variable-speed scroll compressor for improved part-load efficiency.

Most chillers use fixed-speed compressors with a hot gas bypass valve that bypasses hot discharge refrigerant gas back into the compressor to simulate 100% load. This keeps the compressor running at full speed all the time.

Our variable-speed scroll compressor technology varies the compressor speed to match the process load. This means the compressor slows down under part load conditions for peak performance and reduced power use.

Our 5, 10, and 15 ton units use one variable-speed compressor. Our 20 ton unit uses a 10 ton variable-speed and a 10 ton fixed-speed compressor and our 30 ton unit uses a 15 ton variable-speed and 15 ton fixed-speed compressor.

Variable-Speed Compressor Payback (Years)

Cap	Hours	Process Load (Percent of Full Capacity)							
		50%	55%	60%	65%	70%	75%	80%	85%
5 ton	4,000	3.4	3.6	3.9	4.3	4.8	5.5	6.7	8.8
	6,000	2.3	2.4	2.6	2.8	3.2	3.7	4.5	5.9
	8,400	1.6	1.7	1.9	2.0	2.3	2.6	3.2	4.2
10 ton	4,000	1.2	1.3	1.4	1.5	1.7	2.0	2.4	3.1
	6,000	0.8	0.9	0.9	1.0	1.1	1.3	1.6	2.1
	8,400	0.6	0.6	0.7	0.7	0.8	0.9	1.1	1.5
15 ton	4,000	1.1	1.2	1.3	1.4	1.6	1.9	2.4	3.5
	6,000	0.7	0.8	0.8	0.9	1.1	1.3	1.6	2.3
	8,400	0.5	0.6	0.6	0.7	0.8	0.9	1.2	1.7
20 ton	4,000	1.1	1.2	1.3	1.4	1.6	1.9	2.4	3.3
	6,000	0.7	0.8	0.9	1.0	1.1	1.3	1.6	2.2
	8,400	0.5	0.6	0.6	0.7	0.8	0.9	1.2	1.6
30 ton	4,000	0.8	0.8	0.9	1.0	1.1	1.3	1.6	2.1
	6,000	0.5	0.6	0.6	0.7	0.8	0.9	1.1	1.4
	8,400	0.4	0.4	0.4	0.5	0.5	0.6	0.8	1.0

Based on $0.10/kWHr power cost

PLC Controls

Standard PLC with 7-inch touch screen to provide an enhanced level of monitoring and control.

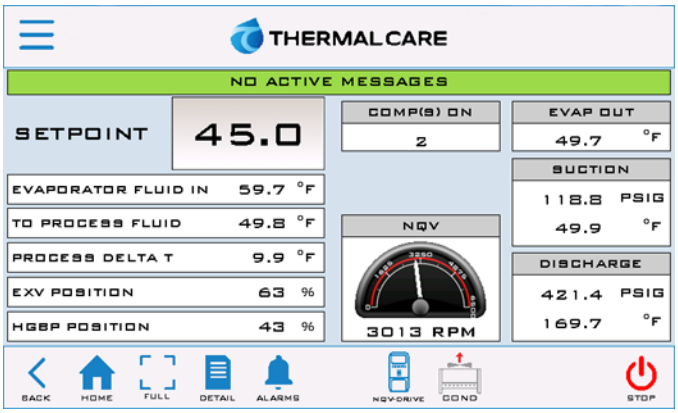

Sample of Home Screen

Direct Drive Scroll Compressors

Direct drive hermetically sealed scroll compressors with proven performance in industrial cooling for reliable, low maintenance, and efficient operation.

Stainless Steel Evaporators

High-efficiency stainless steel plates with copper brazing provide maximum performance, long life, and an enhanced level of protection from harsh process conditions.

Stainless Steel Pump

Stainless steel pump selected for peak performance with the utmost in corrosion protection to ensure a long useful life under severe industrial conditions.

Nonferrous Reservoir and Water Lines
The insulated reservoir, fluid lines, pumps, and other components in the process fluid circuit will remain free of rust to provide maximum corrosion protection.

Evaporator Inlet Strainer
The evaporator inlet strainer removes any debris present in the process fluid to prevent costly downtime and repair due to a clogged chiller evaporator.

Easy Access Cabinet
Heavy-gauge machine access doors with industrial grade tools-free latches provide quick access to all components for easy operation and maintenance.

Compressor Protection Technology
Our compressor protection technology uses start-to-start anti-recycle control logic to limit cycling under low-load operating conditions to extend compressor life.

Compressor and Pump Run Hour Displays
The ability to monitor compressor and pump running hours is useful and is an important tool to assist with scheduling maintenance.

Power Monitor
The main power monitoring system protects the chiller from extensive damage to the compressor and pump due to loss of phase or phase reversal in the main supply.

Reservoir Low Level Alarm
Indicates a low process fluid condition and protects the process pump and chiller from expensive damage caused by a critically low operating level in the reservoir.

Master Reset
The master reset function is a quick and easy way to reset and restore the control system to factory default settings if a control parameter is mistakenly changed.

High-Quality 24 VDC Power Supply
The 24-volt DC power supply ensures dependable control circuit power and isolates the control circuit from static interference to ensure stable and precise operation.

Warranty
18 months parts on entire unit
1 year labor

Other Available Options
- High flow / high pressure pumps
- High flow unit design
- Alarm horn
- Alarm relay
- Rotary non-fused or fused disconnect switch
- C-UL508A industrial control panel construction
- Outdoor-duty construction
- Extended condenser air range (0°F to 110°F)
- Low temperature condenser air range (-20°F to 110°F)
- Air-cooled condenser coil coating for coastal regions
- Pump and tank deduct
- Oversized reservoirs
- Water circuit designed for use with de-ionized water
- Stainless steel cabinetry
- Automatic electric water make-up valve
- High pressure fans for ducting of discharge air
- 4 to 20 mA cooling supply temperature retransmit
- Emergency stop button
- Hand-held remote controller with 50 foot wire
- Special color paint
- Modbus RTU, BACnet, LonWorks, or SPI communications

Accuchiller NQV Portable Chiller

Air-Cooled Condenser Chillers

Model	NQVA05	NQVA10	NQVA15	NQVA20	NQVA30
Cooling Capacity (tons)[1]	5	11	15	21	31
Set Point Range (°F)	20 to 80	20 to 80	20 to 80	20 to 80	20 to 80
Compressor (qty)	1	1	1	2	2
Sound Pressure @ 1 meter (dBA)	74	76	82	84	86
Pump Motor Size (hp)	1.5	2	3	5	5
Pump Flow (gpm)	12	27	36	48	72
Net Available Pump Pressure (psi)[2]	39	38	43	50	47
Reservoir Holding Capacity (gal)	11	22	40	50	67
Shipping Weight (lbs)	770	1,245	3,250	3,350	4,200
Operating Weight (lbs)	860	1,420	3,585	3,765	4,760
MCA @ 460/3/60 (amps)[3]	22	46	86	73	125
MOP @ 460/3/60 (amps)[4]	40	80	150	110	200

[1]Cooling tons based on 12,000 BTU/Hr/ton with 50°F leaving coolant and 95°F ambient air, R410A refrigerant.
[2]Net available pressure at outlet of chiller is pump discharge pressure less the internal pressure loss through the fluid circuit.
[3]MCA is Minimum Circuit Amps with standard condenser fan(s) and pump under full load, used for minimum wire size requirement.
[4]MOP is Maximum Overcurrent Protection with standard condenser fans(s) and pump, used for sizing main power protection devices.

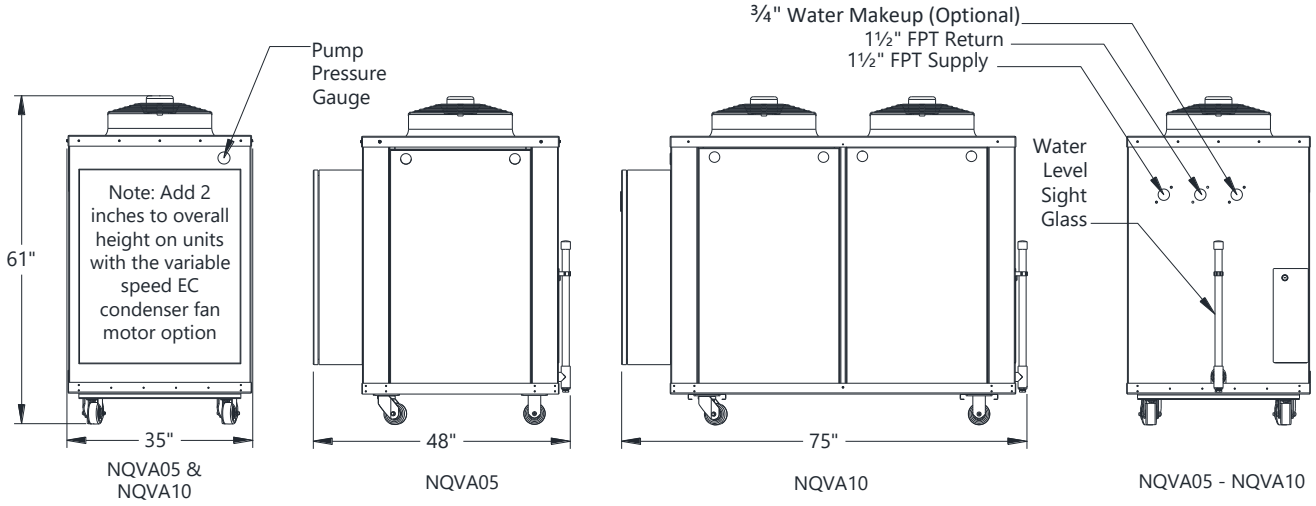

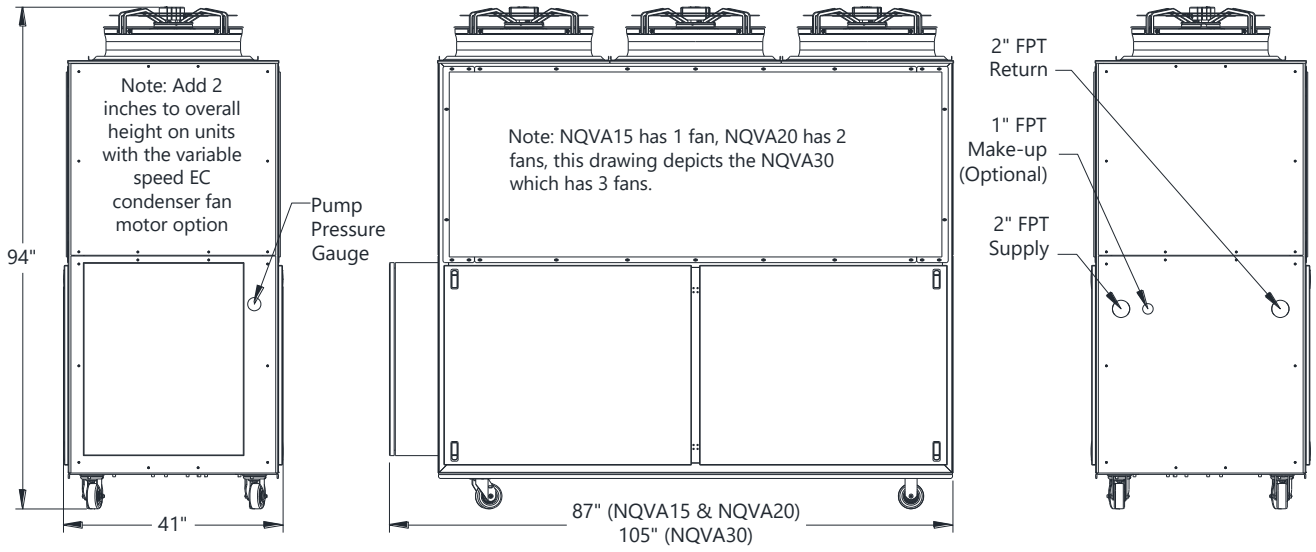

Water-Cooled Condenser Chillers

Model	NQVW05	NQVW10	NQVW15	NQVW20	NQVW30
Cooling Capacity (tons)[1]	6	12	17	23	33
Set Point Range (°F)	20 to 80	20 to 80	20 to 80	20 to 80	20 to 80
Compressor (qty)	1	1	1	2	2
Sound Pressure @ 1 meter (dBA)	70	71	73	74	75
Pump Motor Size (hp)	1.5	2	3	5	5
Pump Flow (gpm)	13	29	39	54	79
Net Available Pump Pressure (psi)[2]	37	36	39	45	44
Reservoir Holding Capacity (gal)	11	22	22	50	67
Shipping Weight (lbs)	770	1,245	1,365	1,950	2,300
Operating Weight (lbs)	860	1,420	1,550	2,365	2,860
MCA @ 460/3/60 (amps)[3]	20	42	81	64	111
MOP @ 460/3/60 (amps)[4]	35	80	150	100	175

[1]Cooling tons based on 12,000 BTU/Hr/ton with 50°F leaving coolant and 85°F condenser water, R410A refrigerant.
[2]Net available pressure at outlet of chiller is pump discharge pressure less the internal pressure loss through the fluid circuit.
[3]MCA is Minimum Circuit Amps with standard pump under full load, used for minimum wire size requirement.
[4]MOP is Maximum Overcurrent Protection with standard pump, used for sizing main power protection device.

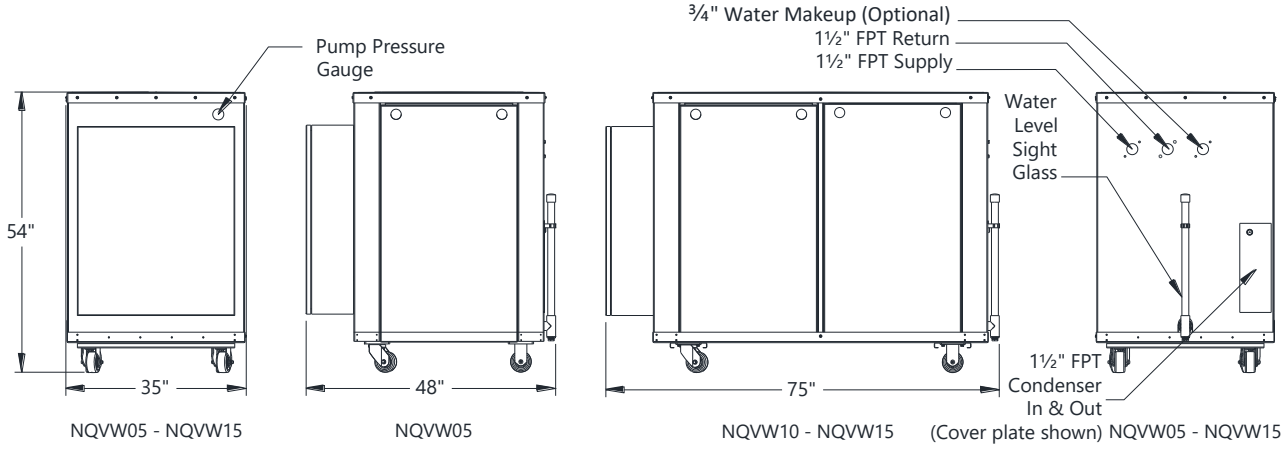

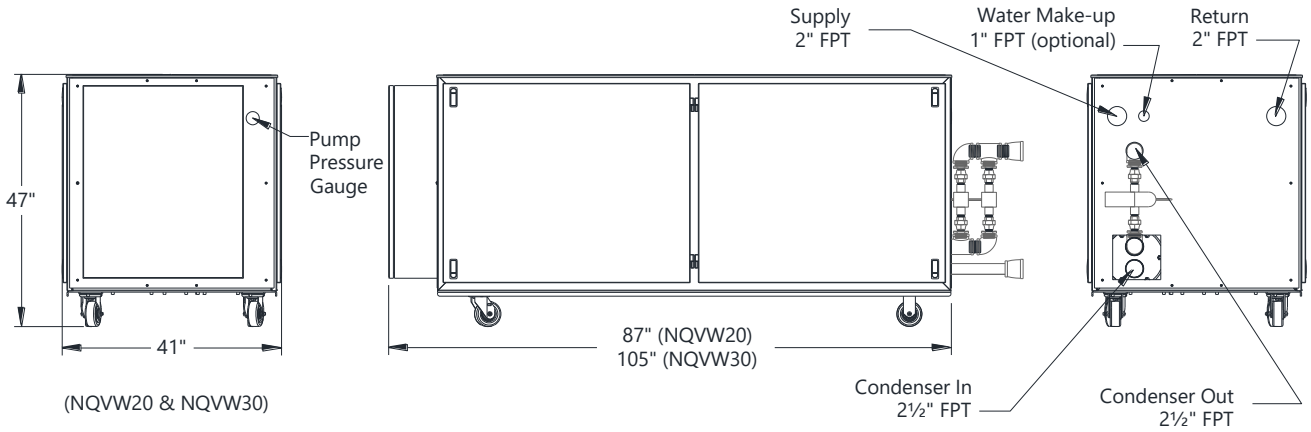

THERMAL CARE
5680 W. Jarvis Ave • Niles, IL 60714
847-966-2260 • info@thermalcare.com
www.thermalcare.com